JHA5700SR 90° DATASHEET

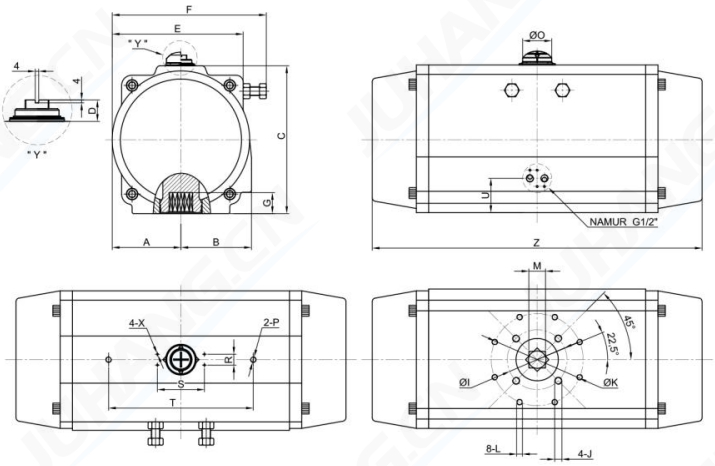

Reference Parameters			
Cylinder size	350		mm
Weight	197		kg
Air volume	Open	34.5	L
	Close	-	
Cycle speed*①	Open	<18	s
	Close	<17	
Pressure rang	2 up to 8		bar(g)
Media	Clean,dry and non-corrosive compressed air		
Temperature	High	-15 up to 150	℃
	Standard	-20 up to 80	
	Low	-40 up to 80	
Flange	F16/F25		
Stroke	90±5		°

> According to EN 15714-3 & ISO 5211

>*①. Test conditions: clean air with a pressure of 6 bar,the diameter of the pipe is10 mm,and the temperature is room temperature.

Dimensions in mm

Model	A	B	C	D	E	F	G	U	ϕK	L	M	R	S	T	O	J	ϕI	P	Z	X	Air connection
JHA5700SR	190	195	408	30	362	426	58	95	254	M16*25	46	30	130	400	80	M20*25	165	M16*20	912	M5*8	G1/2"

OUTPUT TORQUE (Unit:N.m)

Model	Air Supply Pressure in bar(g)																				
	Spring	2.5		3		4		4.5		5		5.5		6		7		8		Spring output	
	Type	0°	90°	0°	90°	0°	90°	0°	90°	0°	90°	0°	90°	0°	90°	0°	90°	0°	90°	Start	End
JHA5700SR	K6	1406	736	1985	1314	3142	2471	3720	3050	4298	3628									2156	1486
	K8			1489	595	2646	1752	3225	2331	3803	2909	4382	3488	4960	4066	6117	5223			2875	1981
	K10					2151	1034	2730	1612	3308	2190	3886	2769	4465	3347	5622	4504	6778	5661	3594	2477
	K12									2812	1472	3391	2050	3969	2629	5126	3785	6283	4942	4313	2972

OUTPUT TORQUE (Unit:lbf.in)

Model	Air Supply Pressure in psi																				
	Spring	36		44		58		65		73		80		87		102		116		Spring output	
	Type	0°	90°	0°	90°	0°	90°	0°	90°	0°	90°	0°	90°	0°	90°	0°	90°	0°	90°	Start	End
JHA5700SR	K6	12444	6514	17569	11630	27809	21870	32925	26995	38040	32110									19082	13152
	K8			13179	5266	23419	15506	28544	20631	33659	25747	38784	30871	43899	35987	54140	46227			25446	17533
	K10					19038	9152	24162	14267	29278	19383	34394	24508	39518	29623	49759	39864	59990	50104	31809	21923
	K12									24888	13028	30013	18144	35128	23268	45369	33500	55609	43740	38173	26304

Notes:

> 1 bar(g) = 14.5038 psi ; 1 N.m = 8.8507 lbf.in

> For further information regarding options , materials , certifications and additional execution please contact JUHANG's sales office.

> Flange and bi-square drive shall comply with ISO 5211 standard.

> Solenoid valve mounting interface according to VDI/VDE 3845(NAMUR)